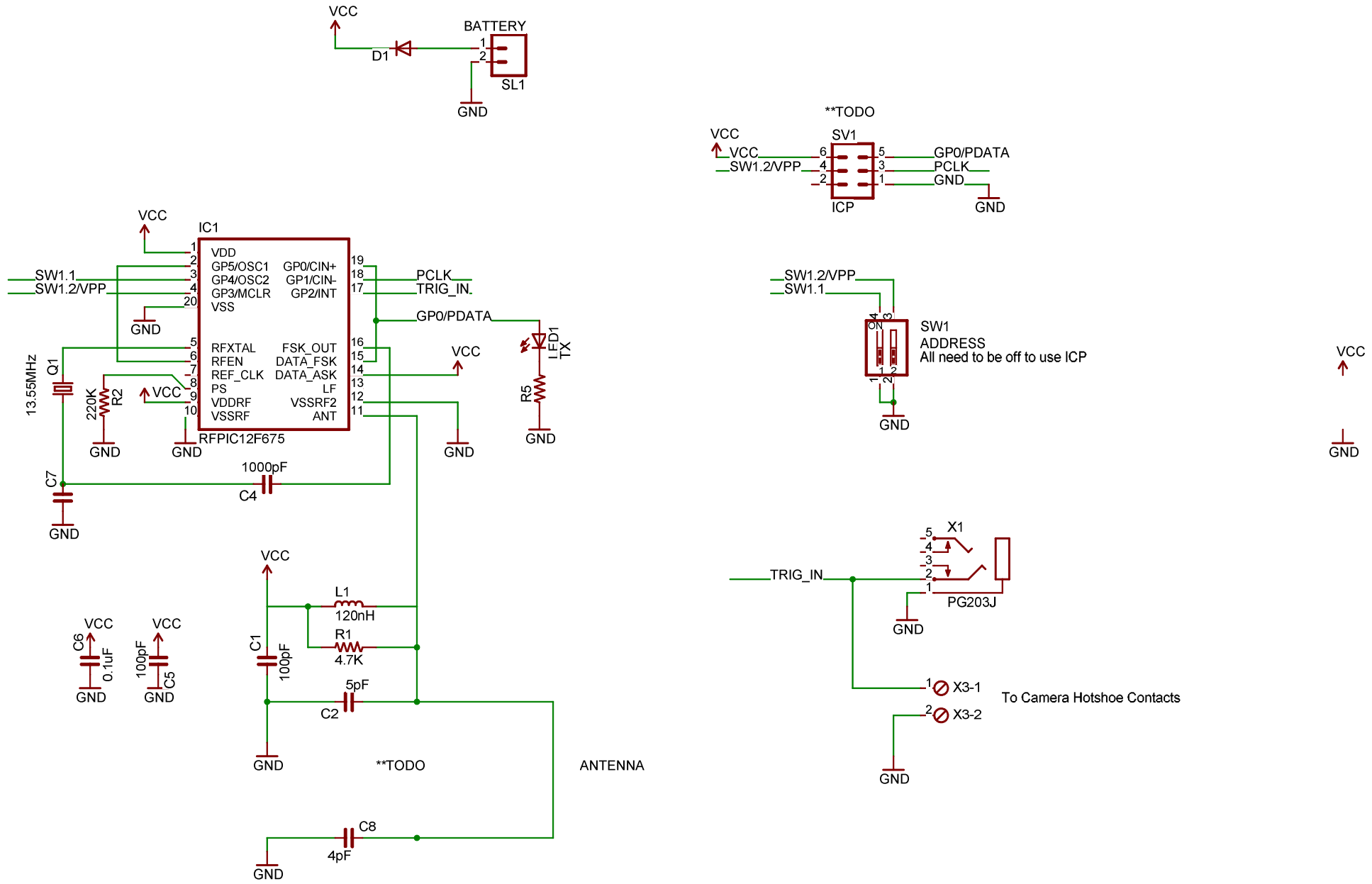
VCC
BATTERY
D1
SL1
GND
**TODO
SV1
VCC
SW1.2/VPP
GP0/PDATA
PCLK
GND
ICP
IC1
VDD
GP5/OSC1
GP4/OSC2
GP3/MCLR
VSS
GP0/CIN+
GP1/CIN-
GP2/INT
RFXTAL
RFEN
REF_CLK
PS
VDDRF
VSSRF
FSK_OUT
DATA_FSK
DATA_ASK
LF
VSSRF2
ANT
RFPIC12F675
SW1.1
TRIG_IN
LED1
TX
R5
13.55MHz
Q1
220K
R2
C7
1000pF
C4
SW1
ADDRESS
All need to be off to use ICP
ON
X1
PG203J
X3-1
X3-2
To Camera Hotshoe Contacts
C6
0.1uF
100pF
C5
C1
L1
120nH
R1
4.7K
5pF
C2
ANTENNA
C8
4pF